D40 P/L

v.1

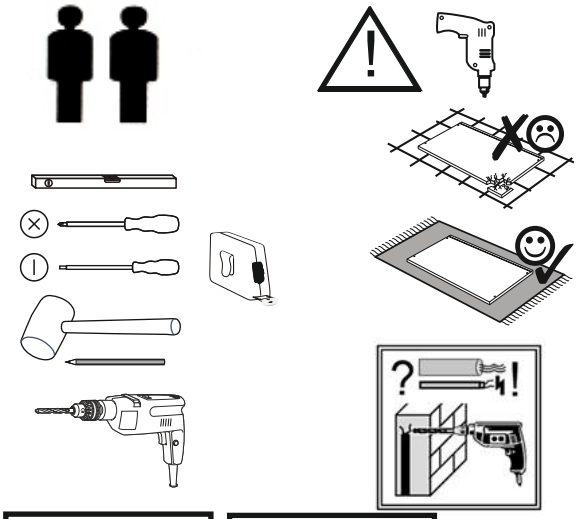

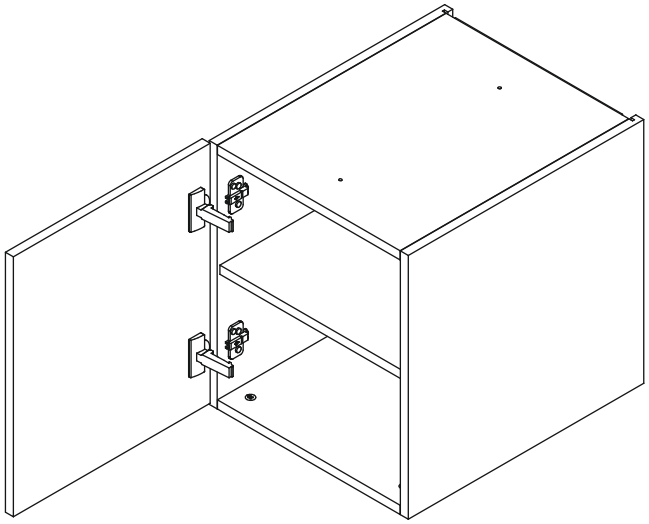

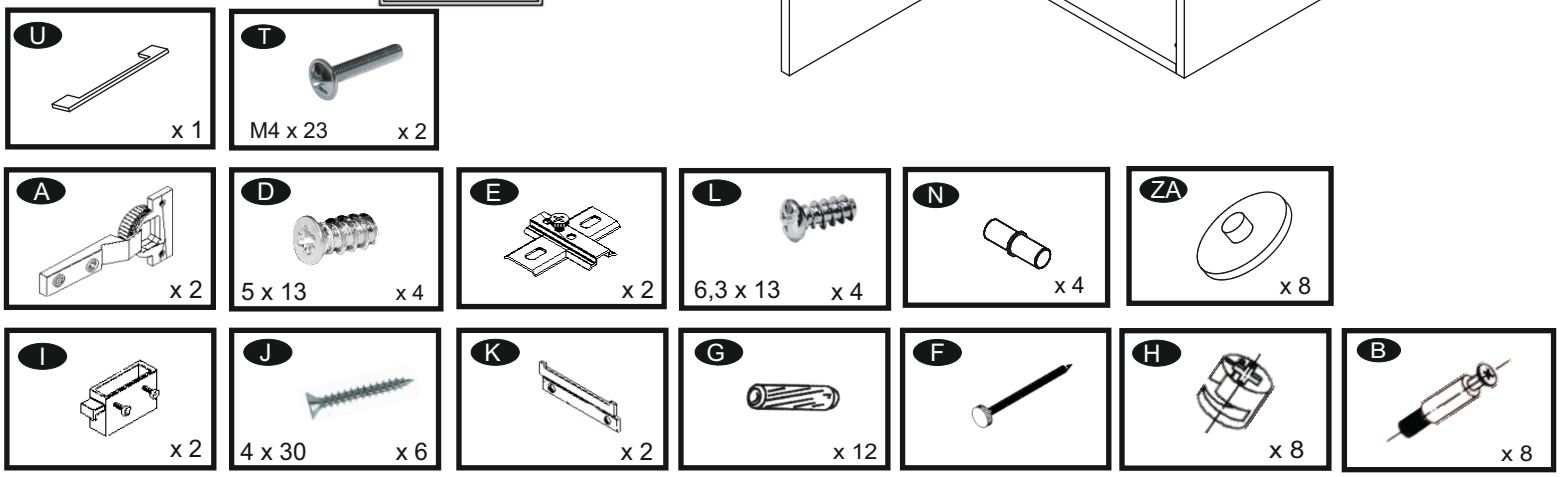
U
x 1
T
M4 x 23
x 2
A
x 2
D
5 x 13
x 4
E
x 2
L
6,3 x 13
x 4
N
x 4
ZA
x 8
I
x 2
J
4 x 30
x 6
K
x 2
G
x 12
F
H
x 8
B
x 8

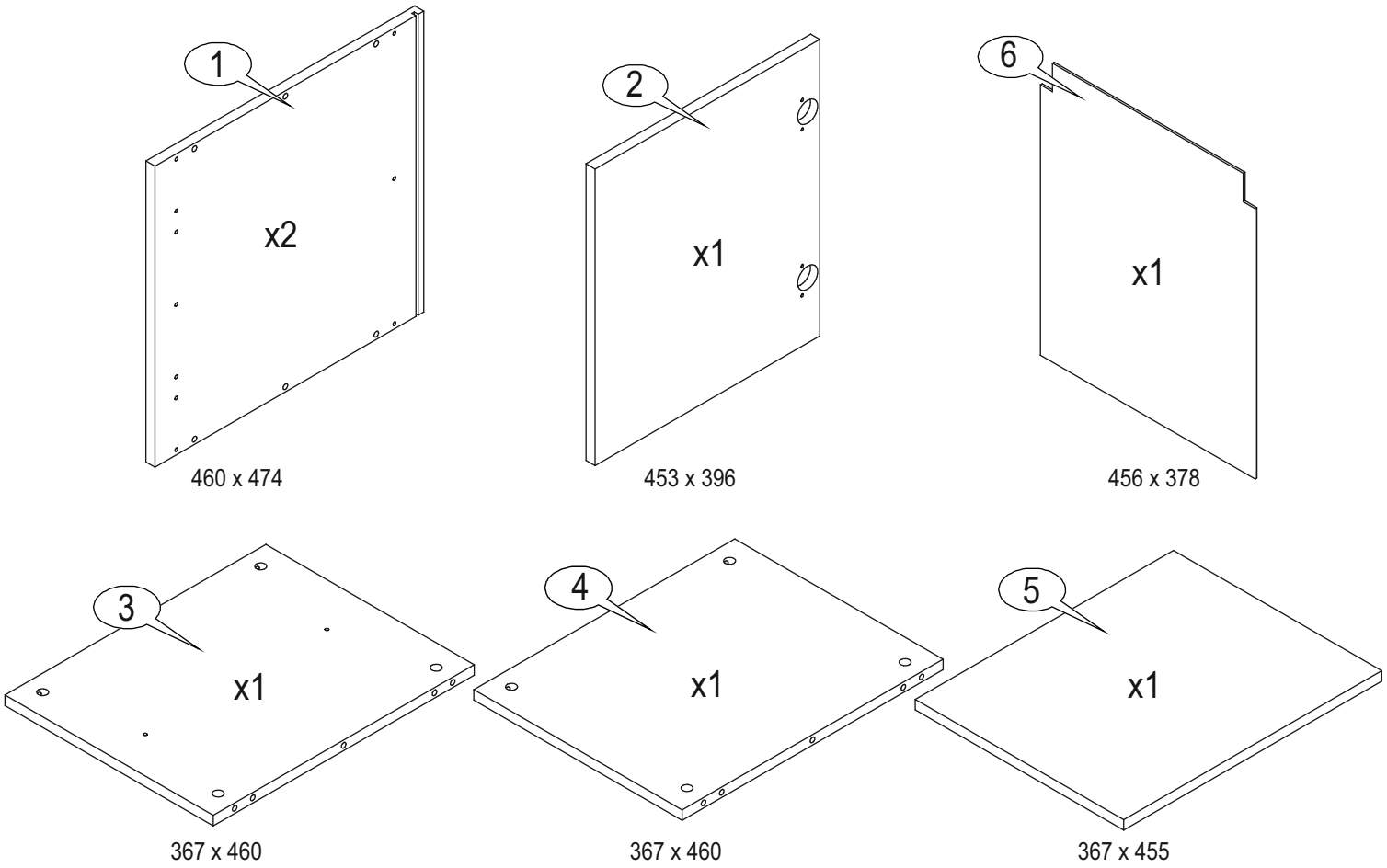
1
x2
460 x 474
2
x1
453 x 396
6
x1
456 x 378
3
x1
367 x 460
4
x1
367 x 460
5
x1
367 x 455

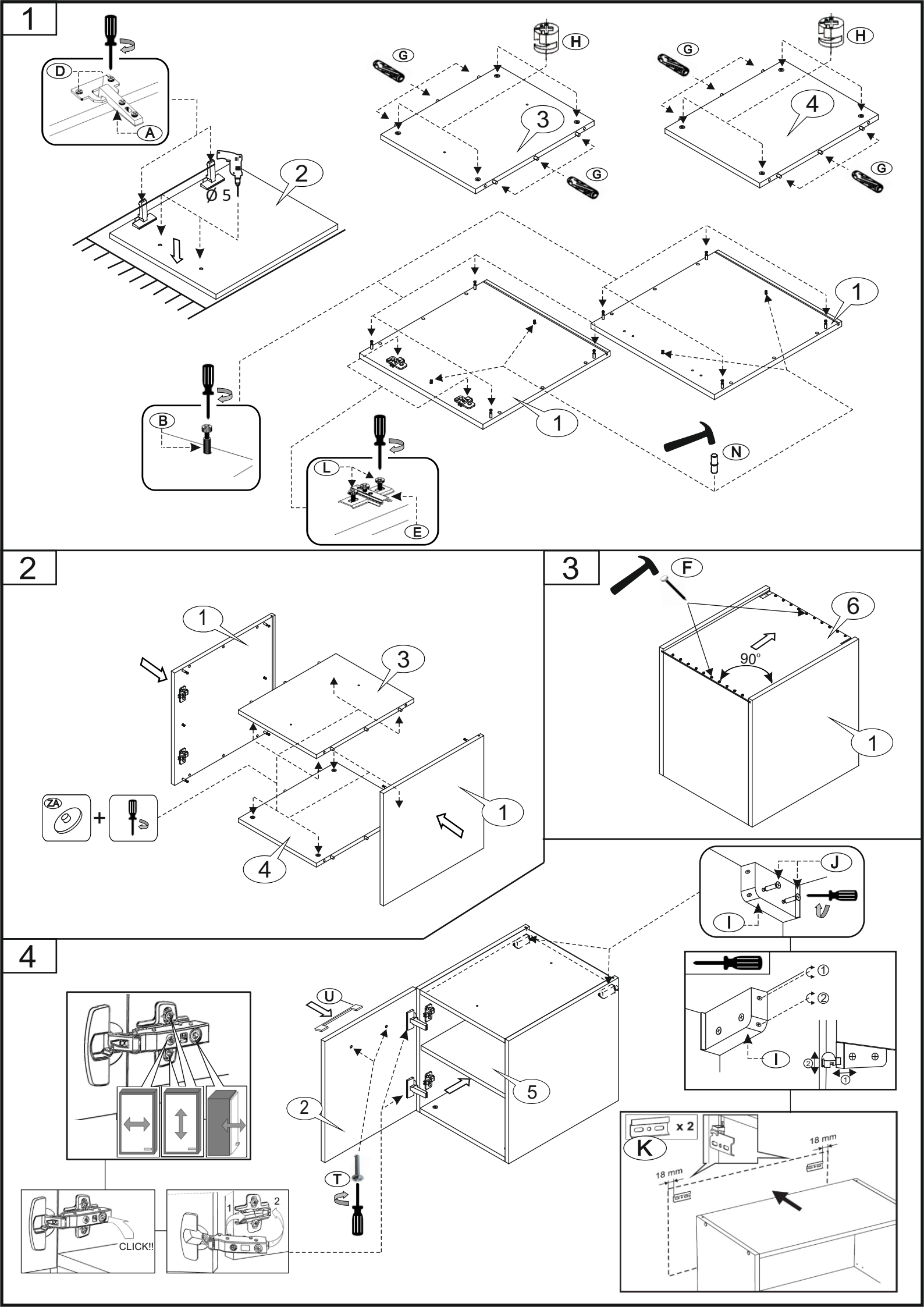
1
D
A
2
Ø 5
G
H
3
4
B
L
E
1
N
2
1
3
ZA
4
1
3
F
6
90°
1
4
J
I
U
2
5
T
I
x 2
K
18 mm
18 mm
CLICK!!
1
2